# QUICK START GUIDE

Modular 3000 Series • 115 V / 60 Hz

## WELCOME TO U-LINE

Congratulations on your U-Line purchase. Your product comes from a company with over five decades and three generations of premium modular ice making, refrigeration, and wine preservation experience. U-Line continues to be the American leader, delivering versatility and flexibility for multiple applications including residential, light commercial, outdoor and marine use. U-Line's complete product collection includes modular Wine Captain® Models, Beverage Centers, Clear Ice Machines, Crescent Ice Makers, Glass & Solid Door Refrigerators, Drawer Models, Freezers, and Combo® Models.

U-Line has captivated those with an appreciation for the finer things with exceptional functionality, style, inspired innovations and attention to even the smallest details. We are known and respected for our unwavering dedication to product design, quality and selection. U-Line is headquartered in Milwaukee, Wisconsin with a west coast office located in Laguna Beach, California and European support in Dublin, Ireland. U-Line has shipped product to five continents for over two decades and is proud to have the opportunity to ship to you. U-Line - RIGHT PRODUCT. RIGHT PLACE. RIGHT TEMPERATURE®.

## PRODUCT INFORMATION

Looking for additional information on your product? User Guides, Quick Reference Guides, CAD Drawings, Compliance Documentation, and Product Warranty information are all available for reference and download at u-line.com under Documentation.

## PROPERTY DAMAGE / INJURY CONCERNS

In the unlikely event property damage or personal injury is suspected related to a U-Line product, please take the following steps:

1. U-Line Customer Care must be contacted immediately at +1.800.779.2547.
2. Service or repairs performed on the unit without prior written approval from U-Line is not permitted. If the unit has been altered or repaired in the field without prior written approval from U-Line, claims will not be eligible.

## SERVICE INFORMATION

Answers to Customer Frequently Asked Questions are available at u-line.com under Customer Care or you may contact our Customer Care group directly, contact information below.

### GENERAL INQUIRIES

U-Line Corporation
8900 N. 55th Street
Milwaukee, Wisconsin 53223 USA
Monday - Friday 8:00 am to 4:30 pm CST
T: +1.414.354.0300
F: +1.414.354.7905
Email: sales@u-line.com
u-line.com

### SERVICE & PARTS ASSISTANCE

Monday - Friday 8:00 am to 5:30 pm CST
T: +1.800.779.2547
F: +1.414.354.5696
Service Email: onlineservice@u-line.com
Parts Email: onlineparts@u-line.com

### CONNECT WITH US

blog

Designed, engineered and assembled in WI, USA

## Contents

1 Model List
3 Safety and Warning
3 Environmental Requirements
4 Electrical
5 Door Swing
6 General Installation
6 Integrated Panel Installation
9 Control Quick Guide
10 First Use
10 Sabbath Mode
11 Warranty

# Model List

This guide provides the basics to get you started. Looking for more information? Visit u-line.com to view detailed User Guides for all U-Line products.

### Wine Captain® Models

| | | |
|---|---|---|
| U-3018WCS-00A | U-3024ZWCS-00A | U-3036WCWCS-00A |
| U-3018WCS-01A | U-3024ZWCS-01A | U-3036WCWCS-13A |
| U-3018WCS-13A | U-3024ZWCS-13A | U-3036WCWCINT-00A |
| U-3018WCS-15A | U-3024ZWCS-15A | U-3036WCWCINT-60A |
| U-3018WCINT-00A | U-3024ZWCINT-00A | |
| U-3018WCINT-01A | U-3024ZWCINT-01A | |
| U-3018WCINT-60A | U-3024ZWCINT-60A | |
| U-3018WCINT-61A | U-3024ZWCINT-61A | |

### Beverage Centers

| | |
|---|---|
| U-3024BEVS-00A | U-3036BVWCS-00A |
| U-3024BEVS-01A | U-3036BVWCS-13A |
| U-3024BEVS-13A | U-3036BVWCINT-00A |
| U-3024BEVS-15A | U-3036BVWCINT-60A |
| U-3024BEVINT-00A | |
| U-3024BEVINT-01A | |
| U-3024BEVINT-60A | |
| U-3024BEVINT-61A | |

### Glass Door Refrigerators

| | | |
|---|---|---|
| U-3018RGLS-00A | U-3024RGLS-00A | U-3036RRGLS-00A |
| U-3018RGLS-01A | U-3024RGLS-01A | U-3036RRGLS-13A |
| U-3018RGLS-13A | U-3024RGLS-13A | U-3036RRGLINT-00A |
| U-3018RGLS-15A | U-3024RGLS-15A | |
| U-3018RGLINT-00A | U-3024RGLINT-00A | |
| U-3018RGLINT-01A | U-3024RGLINT-01A | |

**Solid Door Refrigerators**

U-3018RS-00A
U-3018RS-01A
U-3018RINT-00A
U-3018RINT-01A

U-3024RS-00A
U-3024RS-01A
U-3024RINT-00A
U-3024RINT-01A
U-3024DWRINT-00A
U-3024DWRS-00A

U-3036RRS-00A
U-3036RRINT-00A

**Freezers**

U-3024FZRS-00A
U-3024FZRS-01A
U-3024FZRINT-00A
U-3024FZRINT-01A

Visit **http://www.u-line.com/product-literature/userguides** or scan this QR code to view all user guides online.

## Safety and Warning

**NOTICE**

**Please read all instructions before installing, operating, or servicing the appliance.**

Use this appliance for its intended purpose only and follow these general precautions with those listed throughout this guide:

**SAFETY ALERT DEFINITIONS**

Throughout this guide are safety items labeled with a Danger, Warning or Caution based on the risk type:

**⚠ DANGER**

**Danger means that failure to follow this safety statement will result in severe personal injury or death.**

**⚠ WARNING**

**Warning means that failure to follow this safety statement could result in serious personal injury or death.**

**⚠ CAUTION**

**Caution means that failure to follow this safety statement may result in minor or moderate personal injury, property or equipment damage.**

**⚠ DANGER**

**This unit contains R600a (Isobutane) which is a flammable hydrocarbon. It is safe for regular use. Do not use sharp objects to expedite defrosting. Do not service without consulting the "R600a specifications" section included in the User Guide. Do not damage the refrigerant circuit.**

**⚠ WARNING**

**Service must be done by factory authorized service personnel. Any parts shall be replaced with like components. Failure to comply could increase the risk of possible ignition due to incorrect parts or improper service..**

## Environmental Requirements

This model is intended for indoor/interior applications only and is not to be used in installations that are open/exposed to natural elements.

This unit is designed to operate between 50°F (10°C) and 100°F (38°C). Higher ambient temperatures may reduce the unit's ability to reach low temperatures and/or reduce ice production on applicable models.

For best performance, keep the unit out of direct sunlight and away from heat generating equipment.

In climates where high humidity and dew points are present, condensation may appear on outside surfaces. This is considered normal. The condensation will evaporate when the humidity drops.

**⚠ CAUTION**

**Damages caused by ambient temperatures of 40°F (4°C) or below are not covered by the warranty.**

## Electrical

**⚠ WARNING**

**SHOCK HAZARD — Electrical Grounding Required. Never attempt to repair or perform maintenance on the unit until the electricity has been disconnected.**

**Never remove the round grounding prong from the plug and never use a two-prong grounding adapter.**

**Altering, cutting or removing power cord, removing power plug, or direct wiring can cause serious injury, fire, loss of property and/or life, and will void the warranty.**

**Never use an extension cord to connect power to the unit.**

**Always keep your working area dry.**

**NOTICE**

**Electrical installation must observe all state and local codes. This unit requires connection to a grounded (three-prong), polarized receptacle that has been placed by a qualified electrician.**

The unit requires a grounded and polarized 115 VAC, 60 Hz, 15A power supply (normal household current). An individual, properly grounded branch circuit or circuit breaker is recommended. A GFCI (ground fault circuit interrupter) is usually not required for fixed location appliances and is not recommended for your unit because it could be prone to nuisance tripping. However, be sure to consult your local codes.

## Door Swing

For Integrated models that are installed adjacent to a wall, 1/4" (6 mm) clearance is recommended from wall on hinge side to allow the door to open 90°. Allow for additional space for any knobs or pulls installed on the integrated panel/frame.

Stainless Steel models that are installed adjacent to a wall require 2-1/4" (57 mm) door clearance on hinge side to allow for door handle.

Units have a zero clearance when installed adjacent to cabinets.

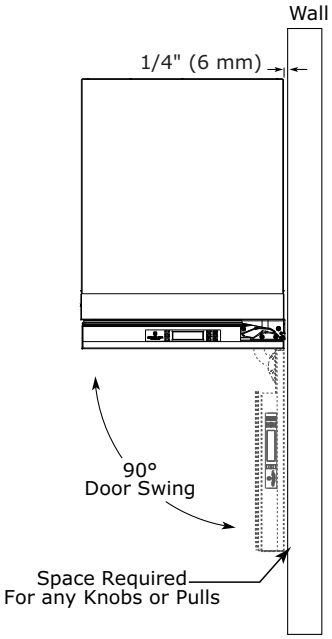


Integrated

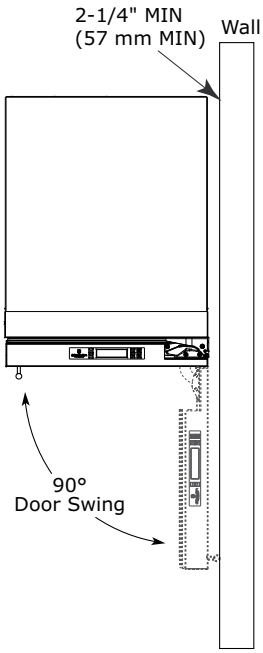


Stainless

## General Installation

1. Use a level to confirm the unit is level. Level should be placed along top edge and side edge as shown.

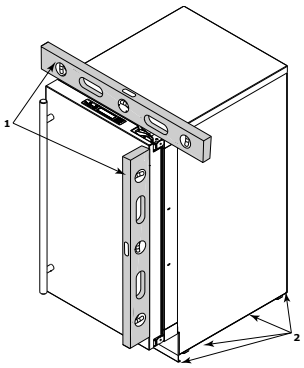


2. If the unit is not level, remove grille and adjust legs as necessary. Use included tool to adjust the height of the rear legs.

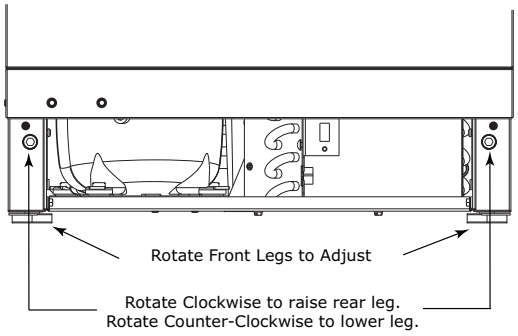


3. Confirm the unit is level after each adjustment and repeat the previous steps until the unit is level.

**INSTALLATION TIP**

If the room floor is higher than the floor in the cutout opening, adjust the rear legs to achieve a total unit rear height of 1/8" (3 mm) less than the opening's rear height. Shorten the unit height in the front by adjusting the front legs. This allows the unit to be gently tipped into the opening. Adjust the front legs to level the unit after it is correctly positioned in the opening.

**INSTALLATION**

1. Plug in the power/electrical cord.
2. Gently push the unit into position. Be careful not to entangle the cord or water and drain lines.
3. Re-check the leveling, from front to back and side to side. Make any necessary adjustments. The unit's top surface should be approximately 1/8" (3 mm) below the countertop.
4. Install the anti-tip bracket.
5. Remove the interior packing material and wipe out the inside of the unit with a clean, water-dampened cloth.

## Integrated Panel Installation

1. Fully open door/drawer.
2. Starting at corner, pull gasket away from door/drawer.
3. Continue to pull gasket free from gasket channel.

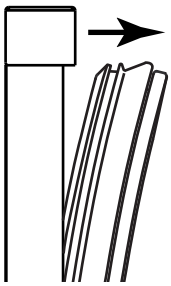

4. Upon removal, lay gasket down on a flat surface.

**NOTICE**

**If the door/drawer houses the display, make certain the display cable remains securely seated in the inner door channel, see below.**

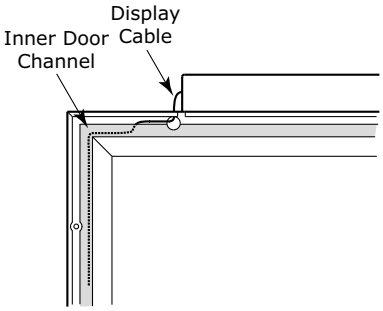


5. The panel should be aligned with the outside edge (opposite the hinge, if equipped) and high enough to align with the highest point in the door/drawer.

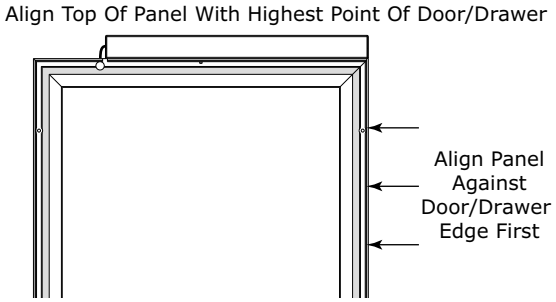


**NOTICE**

**Due to differences in floor construction or surrounding cabinetry, the panel may not sit flush with the top of the door/drawer.**

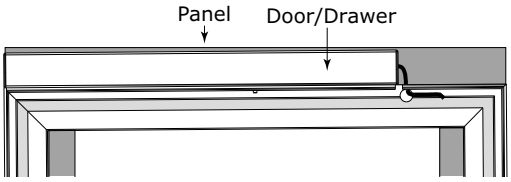


6. Secure integrated panel to door/drawer using clamps. A robust tape may also be used. U-Line recommends the use of bar clamps to secure the panel to the door/drawer. If using tape, be certain the tape will not damage panel finish upon removal.

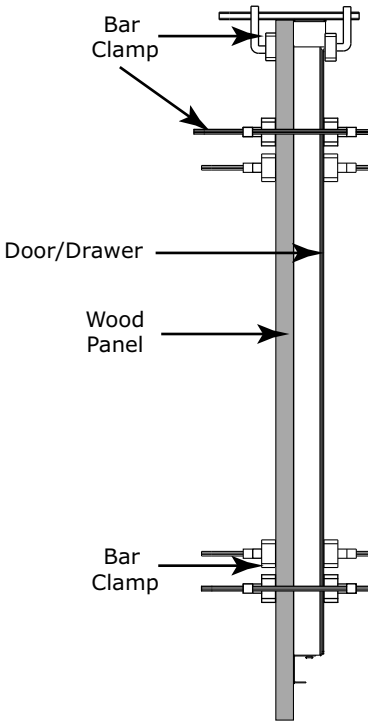


7. Using a 7/64" (3 mm) drill bit, drill 6 pilot holes into the wood panel 1/2" (12 mm) deep using the holes in the door/drawer frame as a guide.

**NOTICE**

**It is important to ensure that all drilled holes are drilled to the correct depth in order to avoid splits in the wood when hardwood is installed.**

8. Locate 6 of the #6x 1-1/2" (38 mm) screws provided with your unit.

9. Using a Phillips screwdriver, place one screw into each of the 6 pilot holes and screw down. Do not overtighten screws.

10. Be sure the screws force their way past the opening on the gasket channel and sit flush against the bottom of the channel.

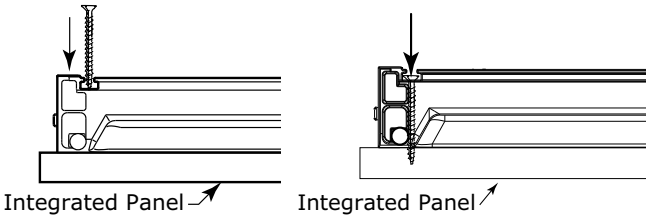


11. Remove clamps from door/drawer.

**NOTICE**

**If panel requires additional adjustment after removing clamps, slightly loosen each screw and adjust panel as necessary. Tighten screws upon completion.**

**Do not overtighten screws, bulges in plastic frame might be visible if tightened too much.**

12. Starting at the corners, re-install the gasket into the gasket channel in the frame. Make sure the gasket is fully seated. This may take some force.

## Control Quick Guide

Actual Display: 3018WC

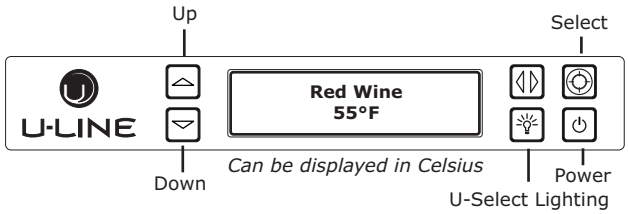


Actual Display: 3024ZWC

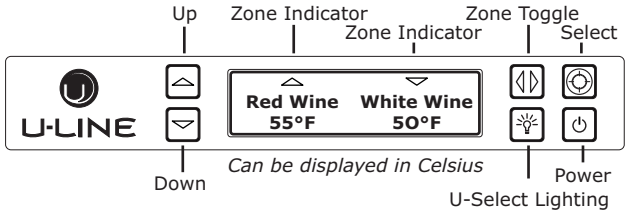


Actual Display: 3036WCWC, 3036BVWC, 3036RR, 3036RRGL

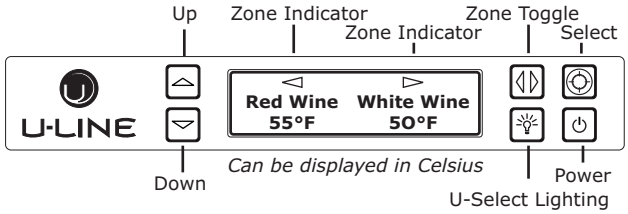


Actual Display: 3018R, 3018RGL and 3024R, 3024RGL, 3024BEV

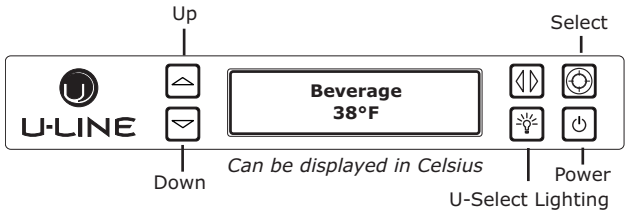


Actual Display: 3024DWR

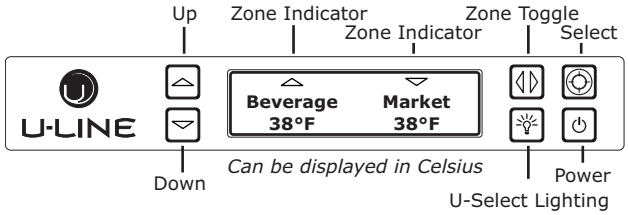


Actual Display: 3024FZR

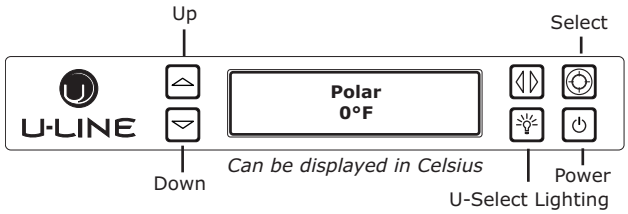


Control Function Guide:

| FUNCTION | COMMAND | DISPLAY/OPTIONS |
|---|---|---|
| OFF | Press ⏻ and hold | Display will count down from 5 to off |
| ON | Press ⏻ and release | Unit will come on immediately |
| Adjust mode | Press ◁▷ to select zone | Press ◎ and release to scroll through the modes. Modes available in table below. |
| Adjust temperature | Press △ or ▽ and release to select zone (dual zone only) | Press △ or ▽ and release. When the "F" or "C" in the display is flashing, press △ or ▽ to adjust the set point temperature. |
| Adjust lighting | Press 💡 to adjust lighting | Press ◁▷ to select zone<br>Press △ or ▽ to set low, medium or high |
| Light ON/OFF with door | Press 💡 to have light ON/OFF with door | Press 💡 and release to scroll through timer settings. Both zones will default to the same timer setting. |
| Customer menu | Press ◎ and hold for 5 seconds | Press △ or ▽ to scroll through menu |

| Mode | Set Point °F (°C) | Temperature Range °F (°C) |
|---|---|---|
| Red Wine | 55 (12) | 55-65 (12-18) |
| White Wine | 50 (10) | 45-55 (7-12) |
| Sparkling Wine | 45 (7) | 38-50 (3-10) |
| Deli | 36 (2) | 34-40 (1-4) |
| Beverage/Drinks | 38 (3) | 34-65 (1-18) |
| Market/Fresh | 38 (3) | 34-40 (1-4) |
| Root | 50 (10) | 45-55 (7-12) |
| Pantry | 42 (5) | 34-70 (1-21) |
| Polar | 0 (-18) | (-5)-5 ([-21]-[-15]) |

## First Use

All U-Line controls are preset at the factory. Initial startup requires no adjustments.

**NOTICE**

**U-Line recommends allowing the unit to run overnight before loading with product.**

When plugged in, the unit will begin operating under the factory default setting. Follow the on screen prompt for language selection and temperature units.

To turn the unit off, press ⏻ and hold for 5 seconds and release. The display will show a countdown to switching the unit off.

To power your unit on, simply press ⏻ and the unit will immediately switch on.

## Sabbath Mode

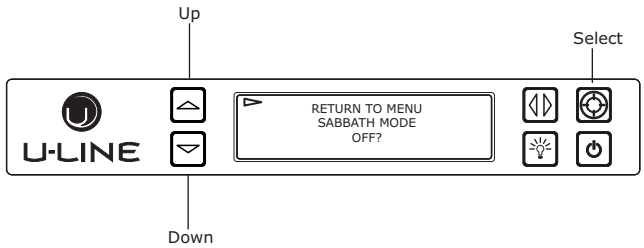


This unit offers a Sabbath mode for users who require this functionality during Sabbaths. Sabbath mode disables system responses to user initiated activities and all external functions, including lighting, display and audible alarms. The unit will still maintain internal temperatures and set points.

To enable Sabbath Mode:

1. Open the unit's door to activate the display.
2. To access the Customer Menu, hold for 5 seconds.
3. Press or to scroll through available selections.
4. Select Sabbath Mode from the Customer Menu by pressing .
5. Press to select "Off".
6. Press . "Off" will begin to flash.

7. Press ⌃ or ⌄ to change “Off” to “On”.

8. Press ◎ to confirm your selection.

The Display will fade out as the unit enters Sabbath Mode. Sabbath

Mode remains active until ⏻ is quickly pressed and released.

## Warranty

**U-LINE CORPORATION LIMITED WARRANTY**

1. U-Line Corporation (“U-Line”) warrants each U-Line product to be free from defects in materials and workmanship for a period of one year (two years on Modular 3000 Series) from the date of purchase. U-Line further warrants the sealed system (consisting of the compressor, condenser, evaporator, hot gas bypass valve, dryer, and connecting tube) in each U-Line product to be free from defects in materials and workmanship for a period of five years from the date of purchase.

2. During the initial one year warranty period (two years on Modular 3000 Series) for all U-Line products U-Line shall: (1) repair any product or replace any part of a product; and (2) for all Marine, RV, and Domestic U-Line products sold and serviced in the United States (including Alaska and Hawaii) and Canada, U-Line shall be responsible for the labor costs performed by a U-Line authorized service company, incurred in connection with the replacement of any defective part. During years two through five of the warranty period for the sealed system, U-Line shall: (1) at U-Line’s option repair or replace any part of the sealed system; and (2) for all Marine, RV, and Domestic U-Line products sold and serviced in the United States (including Alaska and Hawaii) and Canada, U-Line shall be responsible for the labor costs incurred in connection with the replacement of any defective part of the sealed system. All other charges, including transportation charges for replacements under this warranty and labor costs not specifically covered by this warranty, shall be the responsibility of the purchaser. This warranty extends only to the original purchaser of the U-Line product. The Product Registration Card included with the product should be promptly completed by you and mailed back to U-Line, or you can register on-line at www.u-lineservice.com.

3. The warranty listed above does not apply to floor display models. The warranty for these models shall be 30 days from the date of retail purchase and only if U-Line’s Product Registration Card included with the unit is completed and mailed back or electronically submitted to U-Line. This 30 day warranty does not apply to cosmetic damages. A proof of purchase may be required.

4. The following conditions are excluded from this limited warranty: use of cleaners other than the recommended stainless steel cleaners and U-Line Clear Ice Maker cleaner; installation charges; damages caused by disasters or acts of God, such as fire, floods, wind, and lightning; damages incurred or resulting from shipping, improper installation, unauthorized modification, or misuse/abuse of the product; customer education calls; food loss and spoilage; door and water level adjustments (except during the first 30 days from the date of installation); defrosting the product; adjusting the controls; door reversal; and cleaning the condenser.

5. U-Line products are designed to operate in ambient temperatures between 50°F and 100°F unless otherwise noted in the product manual. Exposure to temperatures outside this range may cause degradation of performance and issues, such as lower ice production or spoiled contents, that are not covered under the terms of this warranty as a result of that exposure. U-Line product may not be subjected to temperatures below 40°F without following the winterization and vacation shutdown procedures in the user guide.

6. U-Line's Outdoor Limited Warranty, set forth in this Paragraph 6 shall apply to U-Line models deemed suitable for outdoor use by Underwriters Laboratory ("UL") as noted in the U-Line Product Catalog, U-Line's website, and/or on the serial tag located inside the product.

   A. Outdoor product may come into contact with rain by virtue of outdoor use. Exposure to other sources of water shall also cause this warranty to be void, including flooding of the area in proximity of the unit greater than 1/8" deep in water, hurricanes, splashing of pool water, or directing a spray from a hose or similar device into and around the unit.

7. If a product defect is discovered during the applicable warranty period, you must promptly notify either U-Line at 8900 N. 55th Street, Milwaukee, Wisconsin 53223 USA or at +1.800.779.2547 or the dealer from whom you purchased the product. In no event shall such notification be received later than 30 days after the expiration of the applicable warranty period. U-Line may require that defective parts be returned, at your expense, to U-Line's factory in Milwaukee, Wisconsin, for inspection. Any action by you for breach of warranty must be commenced within one year after the applicable warranty period.

8. THIS LIMITED WARRANTY IS IN LIEU OF ANY AND ALL OTHER WARRANTIES, EXPRESS OR IMPLIED, INCLUDING ANY IMPLIED WARRANTY OF MERCHANTABILITY OR IMPLIED WARRANTY OF FITNESS FOR A PARTICULAR PURPOSE, ALL OF WHICH ARE DISCLAIMED. U-Line's sole liability, and your exclusive remedy, under this warranty is set forth in the paragraphs above. U-Line shall have no liability whatsoever for any incidental, consequential, or special damages arising from the sale, use, or installation of the product or from any other cause whatsoever, whether based on warranty (express or implied) or otherwise based on contract, tort, or any other theory of liability.

Some states do not allow limitations on how long an implied warranty lasts or the exclusion or limitation of incidental or consequential damages, so the above limitations may not apply to you. This warranty gives you specific legal rights, and you may also have other rights which vary from state to state.

Warranty 6/2014 Rev.G

Copyright © 2014 U-Line Corporation. All Rights Reserved.
Publication Number 30425 7/2015 Rev.B